AWK-4252A Series
Quick Installation Guide

Moxa AirWorks

Version 1.2, February 2025

Technical Support Contact Information
www.moxa.com/support

© 2025 Moxa Inc. All rights reserved.

P/N: 1802042520012

Overview

The AWK-4252A Series is an industrial-grade AP/bridge/client with IEEE 802.11ac Wave 2 technology. This Series features concurrent dual-band Wi-Fi data transmissions up to 400 Mbps (2.4 GHz mode) and 867 Mbps (5 GHz mode) simultaneously, meeting the speed and flexibility requirements for industrial applications. In addition, the built-in dual band pass filter and the wide-temperature design ensure reliability and continuous operation in harsh environments. The dual redundant DC power inputs enhance availability while support for PoE power provides more flexibility and simplifies field-site deployments. Meanwhile, backwards compatibility with 802.11a/b/g/n makes the AWK-4252A the ideal solution for constructing a versatile wireless data transmission system.

Hardware Setup

This section covers the hardware setup for the AWK-4252A.

Package Checklist

Moxa's AWK-4252A is shipped with the following items. If any of these items is missing or damaged, please contact your customer service representative for assistance.

- 1 x AWK-4252A wireless AP/client
- 2 x 2.4/5 GHz antennas: ANT-WDB-ANM-0306
- Wall-mount kit
- 1 x Field-installable power plug
- 2 x Field-installable RJ45 plugs
- Quick installation guide (printed)
- Warranty card

Optional Mounting Accessories (Sold Separately)

- DIN-rail kit including 8 screws (M3x6)

Panel Layout of the AWK-4252A

Top Panel View

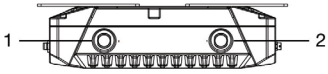

Front Panel View

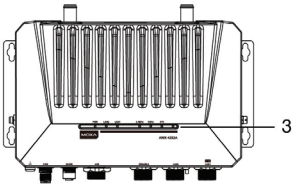

Bottom Panel View

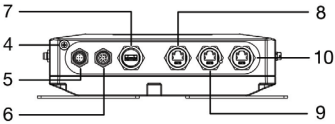

Side Panel View

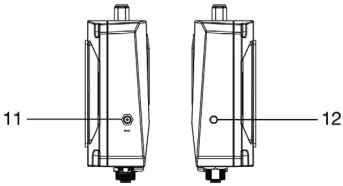

1. Antenna connector 2
2. Antenna connector 1
3. System LEDs: PWR, LAN2, LAN1, 2.4GHz, 5 GHz, SYS
4. Grounding screw (MS5)
5. Power connector (5 pin M12 A-coded male)
6. Digital IO connector (8 pin M12 A coded female)
7. USB Type A connector
8. Console port (RJ45)
9. LAN2 10/100/1000BaseT(X) ports RJ45 port
10. LAN1 10/100/1000BaseT(X) ports RJ45 port
11. Reset button
12. Waterproof vent

Mounting Dimensions

Unit: mm

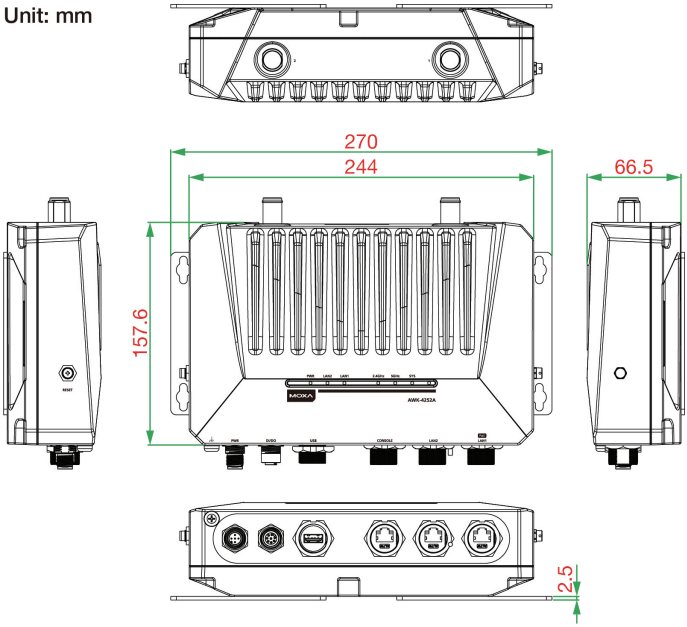

Wall Mounting

For some applications, it may be more convenient to mount the AWK-4252A to a wall, as illustrated below.

STEP 1:
Align the wall-mounting plates to the wall-mounting screw holes on the rear panel, then attach the wall-mounting plates with the M5 x 7.5 mm screws, as shown in the adjacent diagrams.

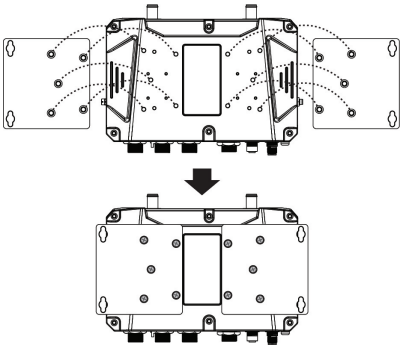

STEP 2:
Mounting the AWK-4252A to a wall requires 4 screws. Use the AWK-4252A device with the wall-mounting plates attached as a guide to mark the correct location of the 4 screws on the wall. The heads of the screws should be less than 6.0 mm in diameter, the shafts should be less than 3.5 mm in diameter, and the screw length should be at least 15 mm, as shown in the figure on the right.

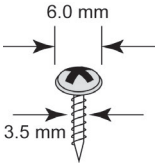

Do not drive the screws in all the way—leave a space of about 2 mm to allow room for sliding the wall-mounting panel between the wall and the screws.

NOTE Test the screw head and shank size by inserting the screws into one of the keyhole shaped apertures of the wall-mounting plates before they are fixed to the wall.

STEP 3:
Once the screws are fixed into the wall, insert the four screw heads through the large opening of the keyhole-shaped apertures, and then slide the AWK-4252A downwards, as indicated on the right. Tighten the four screws for added stability.

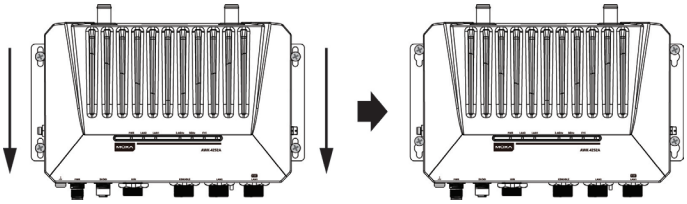

DIN-rail Mounting (Optional)

The DIN-rail mounting kit, which can be bought separately, allows the AWK-4252A to be installed onto a DIN rail for additional flexibility.

Mount the AWK-4252A onto a corrosion-free mounting rail that adheres to the EN 60715 standard.

STEP 1:
Attach the DIN-rail mounting plates to the AWK-4252A.

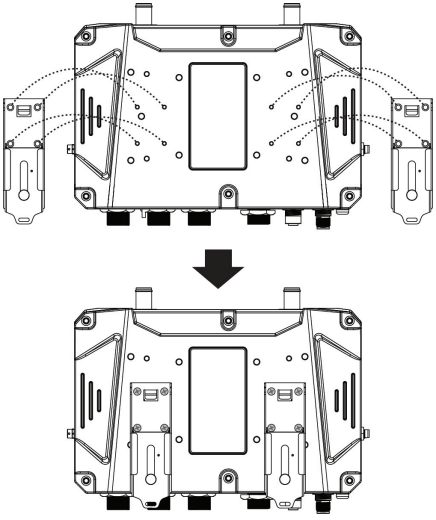

STEP 2:
Insert the upper lip of the DIN-rail kit into the mounting rail.

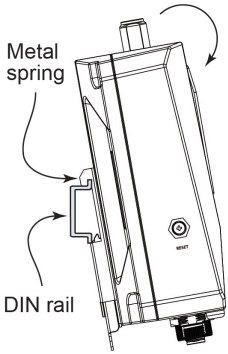

STEP 3:
Press the AWK-4252A towards the mounting rail until it snaps into place.

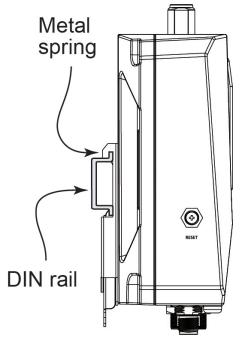

To remove the AWK-4252A from the DIN rail, do the following:

STEP 1:
Pull down the latch on the DIN-rail kit with a screwdriver.

STEP 2 & 3:
Slightly pull the AWK-4252A forward and lift it up to remove it from the mounting rail.

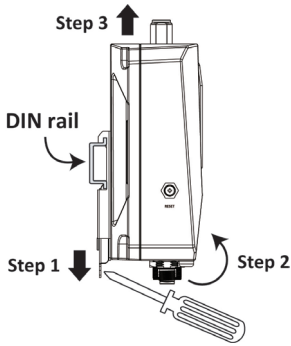

PK-DC2DOF Pole Mounting (Optional)

It may be more convenient to mount the AWK-4252A on a pole for some applications, as illustrated below.

STEP 1:

Attach the pole-mounting kit to the AWK-4252A using M5 x 15.7 mm screws.

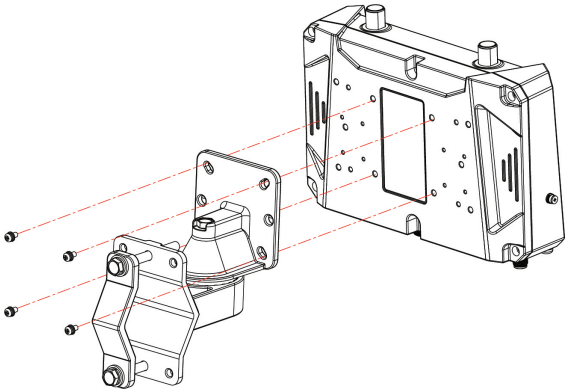

STEP 2:

Install the AWK-4252A with the mount assembled on a pole and fasten the screws M8 screws on the bracket of the pole-mounting kit to secure the device to the pole.

PK-DC2DOF-02 Pole Mounting (Optional)

It may be more convenient to mount the AWK-4252A on a pole for some applications, as illustrated below. The edges of the iron rings on the pole-mounting kit are sharp. We recommend wearing protective gloves during the installation process.

STEP 1:
Attach the pole-mounting kit to the AWK-4252A using M4 x 8 mm screws.

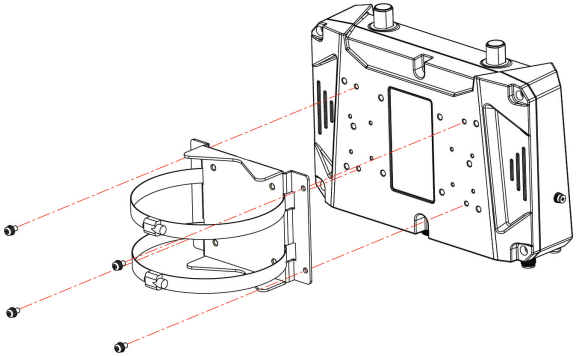

STEP 2:
Use a flathead screwdriver to loosen the hex head screws on the mount to release the rings.

STEP 3:
Install the AWK-4252A with the mount assembled on a pole, then use a flathead screwdriver to fasten the screws on the rings of the pole-mounting kit to secure the device to the pole.

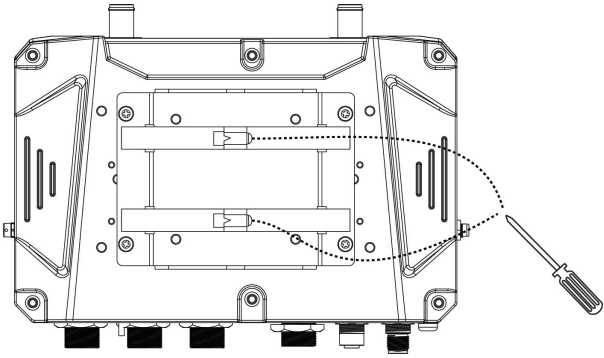

WARNING

- This equipment is intended to be used in a Restricted Access Location, such as a dedicated computer room where only authorized service personnel or users can gain access. Such personnel must be instructed about the fact that the metal chassis of the equipment is extremely hot and may cause burns.
- Service personnel or users have to pay special attention and take special precautions before handling this equipment.
- Only authorized, well-trained professionals should be allowed to access the restricted access location. Access should be controlled by the authority responsible for the location with lock and key or a security identity system.
- **External metal parts are hot!!** Pay special attention or use special protection before handling the equipment.

Wiring Requirements

WARNING

Safety First!

Be sure to disconnect the power cord before installing and/or wiring your AWK-4252A.

Calculate the maximum possible current in each power wire and common wire. Observe all electrical codes that dictate the maximum current allowed for each wire size. If the current goes above the maximum ratings, the wiring could overheat, causing serious damage to your equipment.

Read and Follow These Guidelines:

- Use separate paths to route wiring for power and devices. If power wiring and device wiring paths must cross, make sure the wires are perpendicular at the crossing point.

NOTE Do not run signal or communications wiring and power wiring in the same wire conduit. To avoid interference, wires with different signal characteristics should be routed separately.

- You can use the type of signal transmitted through a wire to determine which wires should be kept separate. The rule of thumb is that wiring that shares similar electrical characteristics can be bundled together.
- Keep input wiring and output wiring separated.
- For future reference, you should label the wiring used for all of your devices.

NOTE If the device is powered by PoE, the PSE equipment and cabling should not be connected to outside facilities.

NOTE The product is intended to be supplied by a UL Listed Power Unit marked "L.P.S." (or "Limited Power Source") and is rated 1) 12-48 VDC, 2.2-0.55 A min. (supplied by power adapter) or 48 VDC, 0.5 A min. (supplied by PoE), Tma = 75°C. If you need further assistance with purchasing the power source, please contact Moxa for further information.

NOTE If using a Class I adapter, the power cord must be connected to a socket-outlet with an earthing connection.

ATTENTION

Make sure the external power adapter (including power cords and plug assemblies) provided with the unit is certified and suitable for use in your country or region.

ATTENTION

Make sure the PSE (power sourcing equipment) or PoE injector used to power the AWK device complies with IEEE 802.3af or IEEE 802.3at.

Grounding the AWK-4252A

Grounding and wire routing help limit the effects of noise due to electromagnetic interference (EMI). Run the ground connection from the ground screw to the grounding surface prior to connecting devices.

ATTENTION

This product is intended to be mounted to a well-grounded mounting surface, such as a metal panel. The potential difference between any two grounding points must be zero. If the potential difference is NOT zero, the product could be permanently damaged.

Installations with Cable Extended Antennas for Outdoor Applications

If an AWK device or its antenna is installed in an outdoor location, proper lightning protection is required to prevent direct lightning strikes to the AWK device. In order to prevent the effects of coupling currents from nearby lightning strikes, a lightning arrester should be installed as part of your antenna system. Ground the device, antenna, as well as the arrester properly to provide maximum outdoor protection for the device.

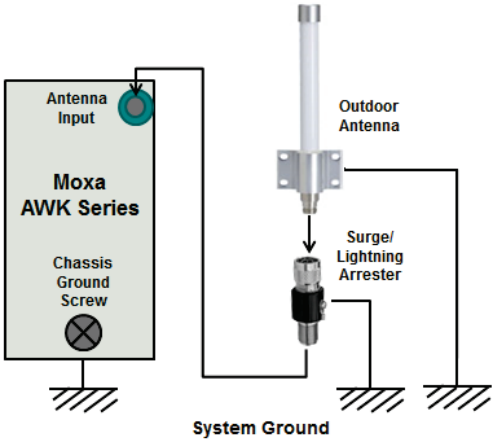

Arrester Accessories

- **SA-NMNF-02:** Surge arrester, N-type (male) to N-type (female)
- **SA-NFNF-02:** Surge arrester, N-type (female) to N-type (female)

Power Input Pin Assignment

The AWK-4252A can be connected to an IEEE 802.3at compliant Power over Ethernet (PoE) power source. When powered via DC power, the AWK-4252A comes with a M12 A-coded 5-pin power input connector located on the bottom panel of the device. The power input connector contains dual power inputs and a ground pin. Refer to the following figure and table for the detailed pin assignment.

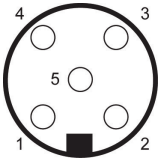

Pin	Power Input
1	V1+
2	V2+
3	V1-
4	V2-
5	GND

ATTENTION

If the AWK-4252A is connected to a motor or other similar type of equipment, be sure to use power isolation protection. Before connecting the AWK-4252A to the DC power inputs, make sure the DC power source voltage is stable.

Wiring the Digital Inputs and Relay Contact (Digital Output)

The AWK-4252A has two sets of digital input—DI1 and DI2. Each DI comprises two contacts of the 8-pin M12 connector on the AWK-4252A's bottom panel. These two digital inputs can be connected to digital-output-enabled sensors for on-site status monitoring.

The AWK-4252A also has one relay output, which consists of the two contacts. These relay contacts are used to detect user-configured events. The two wires attached to the Relay contacts form an open circuit when a user-configured event is triggered. If a user-configured event does not occur, the Relay circuit will be closed.

A field-installable plug, **M12A-8PMM-IP68**, is recommended for connecting the AWK-4252A's DIs and relay.

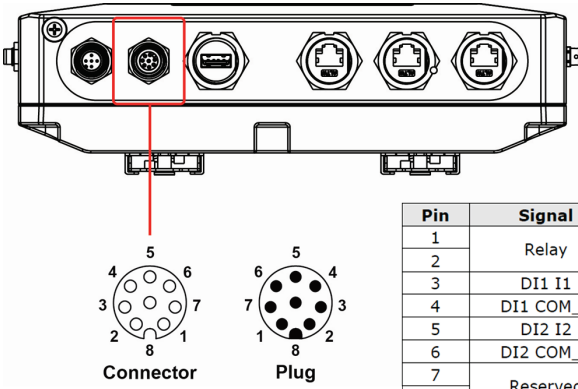

Pin	Signal
1	Relay
2	
3	DI1 I1
4	DI1 COM_1
5	DI2 I2
6	DI2 COM_2
7	Reserved
8	

Communication Connections

10/100/1000BaseT(X) Ethernet Port Connection

The 10/100/1000BaseT(X) ports located on the AWK-4252A's front panel are used to connect to Ethernet-enabled devices.

MDI/MDI-X Port Pinouts

Pin	1000BaseT MDI/MDI-X	10/100BaseT (X) MDI	10/100BaseT (X) MDI-X
1	TRD(0)+	TX+	RX+
2	TRD(0)–	TX-	RX-
3	TRD(1)+	RX+	TX+
4	TRD(2)+	–	–
5	TRD(2)-	–	–
6	TRD(1)-	RX-	TX-
7	TRD(3)+	–	–
8	TRD(3)-	–	–

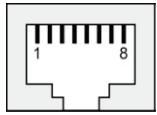

RS-232 Connection

The AWK-4252A has one RS-232 (8-pin RJ45) console port located on the front panel. Use either an RJ45-to-DB9 or RJ45-to-DB25 cable to connect the AWK-4252A's console port to your PC's COM port. You may then use a console terminal program to access the AWK-4252A for console configuration.

Pin	Description
1	DSR
2	NC
3	GND
4	TXD
5	RXD
6	NC
7	NC
8	DTR

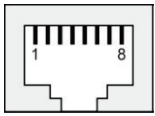

Waterproofing the RJ45 Plug

Dimensions (unit: mm)

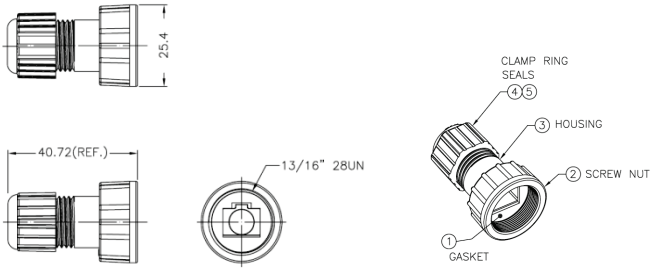

Installation

STEP 1:

Attach the gasket ① to the housing ③

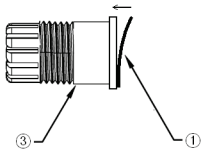

STEP 2:

Insert the cable (e.g., CAT5e) through the clamp ring ④, screw nut ②, seal ⑤ and housing ③, as follows:

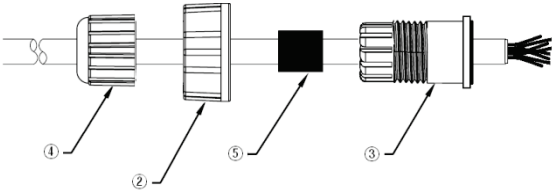

STEP 3:

Crimp the modular RJ plug to the cable. Note that the use of a snagless cover shield or a strain-relief boot is not recommended here. After you have crimped the cable, assemble the seal and the housing (③ and ⑤) as indicated below:

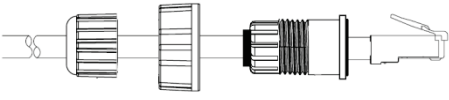

STEP 4:

Tightly screw on the clamp ring ④ to the housing and check to make sure that the plug is securely fastened.

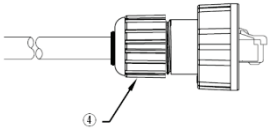

NOTE For a tighter connection, you can connect the RJ45 plug to the AWK-4252A before **STEP 4**.

LED Indicators

The front panel of the AWK-4252A contains several LED indicators. The function of each LED is described in the table below:

LED	Color	State	Description
Front Panel LED Indicators (System)			
PWR1	Green	On	Power is being supplied from power input 1, 2, or PoE.
		Off	Power is not being supplied.
LAN2	Green	On	LAN port's 1000 Mbps link is active.
		Blinking	Data is being transmitted at 1000 Mbps.
		Off	LAN port's 1000 Mbps link is inactive.
	Amber	On	LAN port's 100 Mbps link is active.
		Blinking	Data is being transmitted at 100 Mbps.
		Off	LAN port's 100 Mbps link is inactive.
LAN1	Green	On	LAN port's 1000 Mbps link is active.
		Blinking	Data is being transmitted at 1000 Mbps.
		Off	LAN port's 1000 Mbps link is inactive.
	Amber	On	LAN port's 100 Mbps link is active.
		Blinking	Data is being transmitted at 100 Mbps.
		Off	LAN port's 100 Mbps link is inactive.
2.4G	Green	On	Device is in Client/Client-Router/Slave mode and has established a Wi-Fi connection to an AP with a SNR value of 35 or higher.
		Blinking	Data is being transmitted over the 2.4 GHz band.
	Amber	On	Device is in Client/Client-Router/Slave mode and has established a Wi-Fi connection to an AP with a SNR value of less than 35.
		Blinking	Data is being transmitted over the 2.4 GHz band.
5G	Green	On	Device is in Client/Client-Router/Slave mode and has established a Wi-Fi connection to an AP with a SNR value of 35 or higher.
		Blinking	Data is being transmitted over the 5 GHz band.
	Amber	On	Device is in Client/Client-Router/Slave mode and has established a Wi-Fi connection to an AP with a SNR value of less than 35.
		Blinking	Data is being transmitted over the 5 GHz band.
SYS	Red	On	System configuration error.
		Blinking	System is booting up.
	Green	On	System startup completed and is operating normally.
		Blinking	Device has been located by the Wireless Utility (interval: 1s).

Specifications

Input Current	12-48 VDC, 2.2-0.5 A
Input Voltage	12 to 48 VDC, redundant dual power inputs, 48 VDC Power over Ethernet
Power Consumption	28 W (max.)
Operating Temperature	Wide Temp. Models: -40 to 75°C (-40 to 167°F)
Storage Temperature	-40 to 85°C (-40 to 185°F)

NOTE To meet the standard for IP68 protection, all unused ports should be covered with the protective caps.

ATTENTION

The AWK-4252A is NOT a portable mobile device and should be located at least 20 cm away from the human body.

The AWK-4252A is NOT designed for the general public. To ensure that your AWK-4252A wireless network is safe and configured correctly, consult a well-trained technician to assist with the installation process.

ATTENTION

Use the appropriate antennas for your wireless setup: Use 2.4 GHz antennas when the AWK-4252A is configured for IEEE 802.11b/g/n. Use 5 GHz antennas when the AWK-4252A is configured for IEEE 802.11a/n/ac. Make sure that the antennas are located in an area with a lightning and surge protection system installed.

ATTENTION

Do not locate the antenna near overhead power lines or other electric light or power circuits, or where it can come into contact with such circuits. When installing the antenna, take extreme care not to come into contact with such circuits, because they may cause serious injury or death. For proper installation and grounding of the antenna, refer to national and local codes (for example, U.S.: NFPA 70; National Electrical Code (NEC) Article 810; Canada: Canadian Electrical Code, Section 54).

NOTE For installation flexibility, you can use either antenna 1 or antenna 2. Make sure the antenna connection matches the antennas configured in the AWK-4252A web interface.

To protect the connectors and RF module, all radio ports should be terminated by either an antenna or a terminator. We strongly recommend using resistive terminators for terminating the unused antenna ports.

Software Setup

This section covers the software setup for the AWK-4252A.

How to Access the AWK

Before installing the AWK device (AWK), make sure that all items in the package checklist are provided in the product box. You will also need access to a notebook computer or PC equipped with an Ethernet port.

Step 1: Select a suitable power source and plug in the AWK.

The AWK can be powered by DC power ranging from **12 VDC to 48 VDC** or by a **PoE PSE** via an Ethernet connection.

Step 2: Connect the AWK to the notebook or PC via the AWK's LAN port.

The LED indicator on the AWK's LAN port will light up when a connection is established.

NOTE If you are using an Ethernet-to-USB adapter, follow the instructions in the user's manual provided with the adapter.

Step 3: Set up the computer's IP address.

Choose an IP address for the computer that is on the same subnet as the AWK. Since the AWK's default IP address is **192.168.127.253**, and the subnet mask is **255.255.255.0**, set the IP address to **192.168.127.xxx**, where **xxx** is a value between 1 and 252.

Step 4: Access the homepage of the AWK.

Open your computer's web browser and type **https://192.168.127.253** in the address field to access the AWK's homepage. If successfully connected, the AWK's interface homepage will appear. Click **NEXT**.

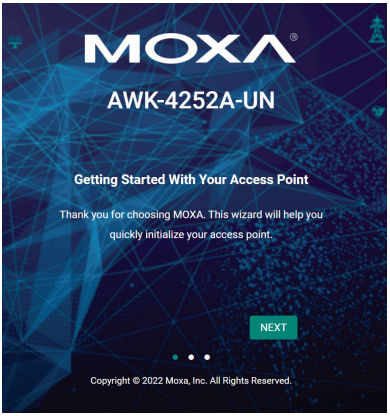

Step 5: Choose your country or region.

Select your country or region from the drop-down list and click **NEXT**.

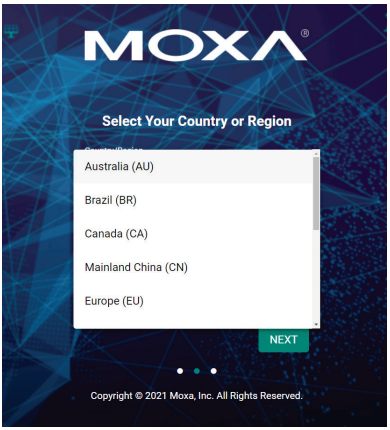

Step 6: Create a user account and password.

Enter the username, password, and email address for your user account and click **CREATE**.

NOTE The username and password are case-sensitive.

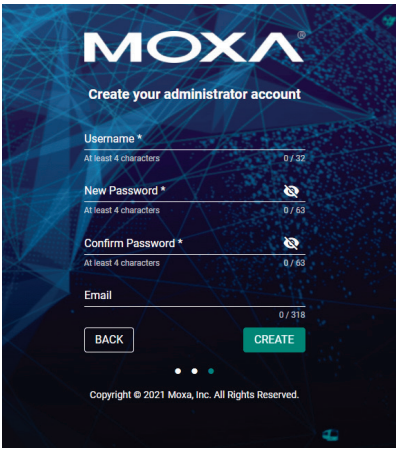

After creating your account, you will be automatically redirected to the login screen.

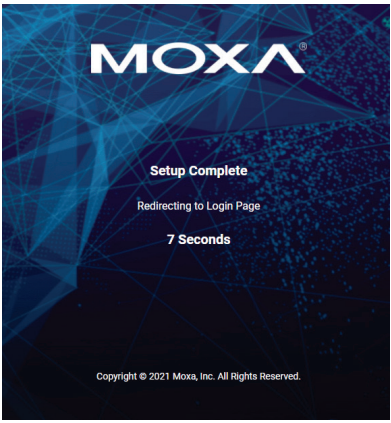

Step 7: Log in to the device.

Enter your username and password and click **LOG IN**. The device will start initializing, this may take several seconds. Once the warning message has disappeared, you can log in using your username and password.

First-time Quick Configuration

After successfully accessing the AWK, refer to the appropriate subsection below to quickly set up a wireless network.

NOTE Ensure that there are no IP address conflicts when you configure more than one AWK on the same subnet.

AP/Client Mode

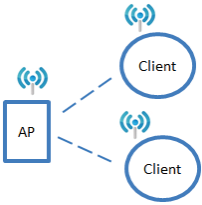

Configuring the AWK as an AP

Step 1: Set the operation mode of the AWK to AP mode.

Go to **Wi-Fi** → **Wireless Settings** and select **AP** from the Operation Mode drop-down list.

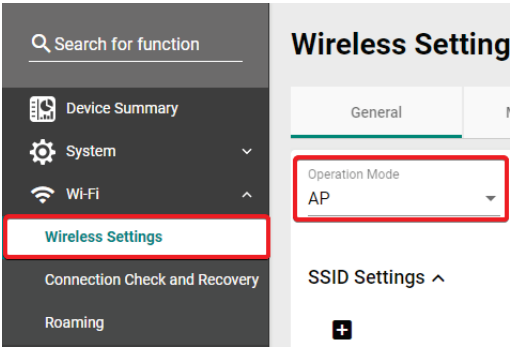

Step 2: Set up the AWK as an AP.

Click the **ADD** icon ⊞ to create a new SSID.

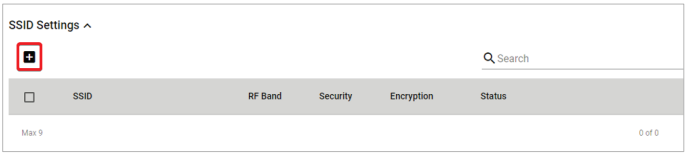

On the settings page, configure the **SSID Status**, **SSID**, **RF Band**, **RTS/CTS Threshold**, and **Transmission Rate** for the 5 GHz or 2.4 GHz band. When finished, click **NEXT**.

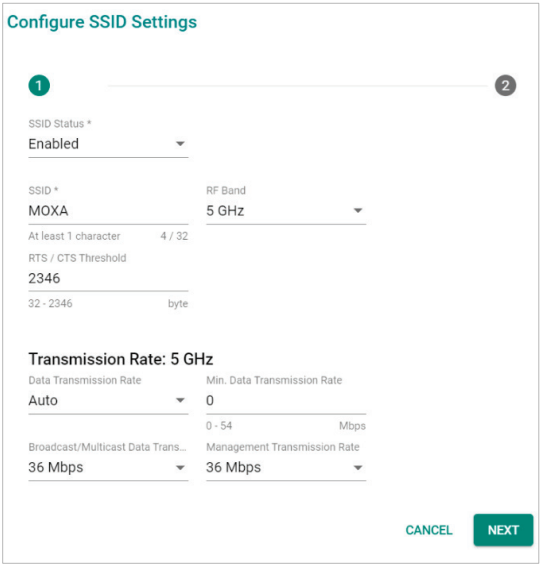

On the second SSID Settings screen, configure the **SSID Broadcast Status** and **Security** type. From here, you can also copy the configuration over to the second SSID. When finished, click **CONFIRM**.

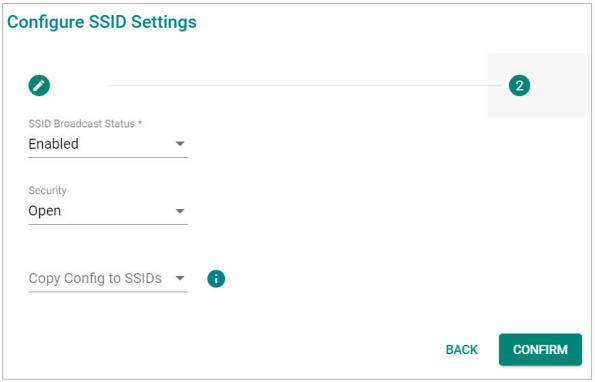

Configuring the AWK as a Client

Set the operation mode of the AWK to Client mode.

Go to **Wi-Fi** → **Wireless Settings** and select **Client** from the Operation Mode drop-down list, set the SSID, and click **Apply**. For more detailed configurations, refer to the **AWK-4252A User's Manual**.

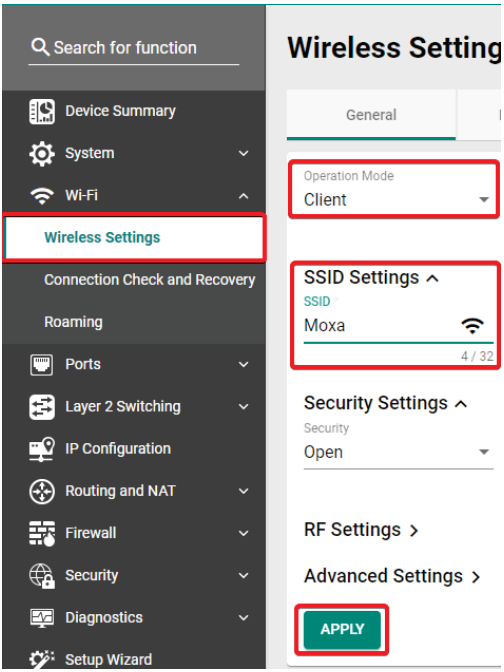

Master/slave Mode

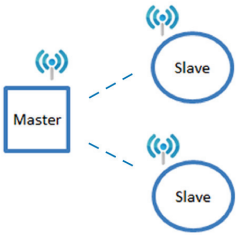

Configuring the AWK as a Master

Step 1: Set the operation mode of the AWK to Master mode.

Go to **Wi-Fi** → **Wireless Settings** and select **Master** from the Operation Mode drop-down list.

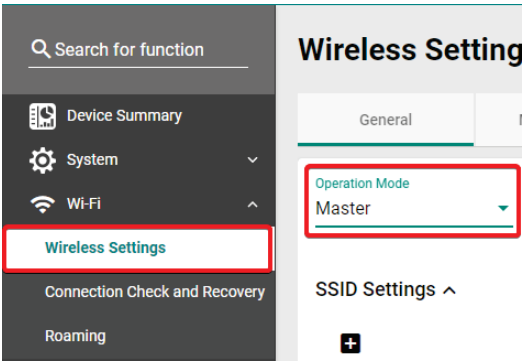

Step 2: Set up the AWK as a Master.

Click the **ADD** icon ⊞ to create a new SSID.

On the settings page, configure the **SSID Status**, **Master/AP** (select Master),**SSID**, **RF Band**, **RTS/CTS Threshold**, and **Transmission Rate** for the 5 GHz or 2.4 GHz band. When finished, click **NEXT**.

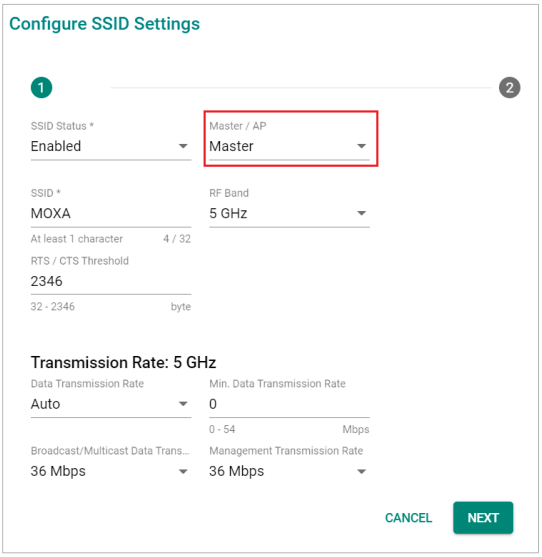

On the second SSID Settings screen, configure the **SSID Broadcast Status** and **Security** type. From here, you can also copy the configuration over to the second SSID. When finished, click **CONFIRM**.

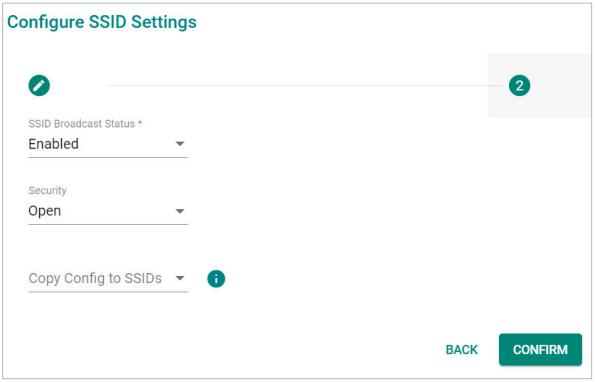

Configuring the AWK as a Slave

Set the operation mode of the AWK to Slave mode.

Go to **Wi-Fi** → **Wireless Settings** and select **Slave** from the Operation Mode drop-down list, set the SSID, and click **Apply**. For more detailed configurations, refer to the **AWK-4252A User's Manual**.

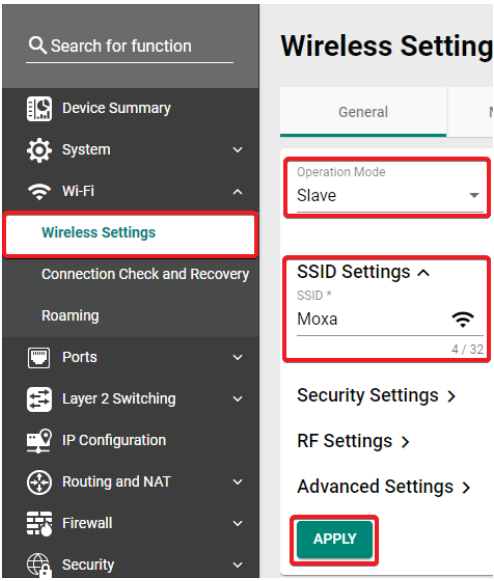

Certifications

FCC/IC Statements

Federal Communication Commission Interference Statement

This equipment has been tested and found to comply with the limits for a Class A digital device, pursuant to Part 15 of the FCC Rules. These limits are designed to provide reasonable protection against harmful interference in a residential installation. This equipment generates, uses and can radiate radio frequency energy and, if not installed and used in accordance with the instructions, may cause harmful interference to radio communications.

However, there is no guarantee that interference will not occur in a particular installation. If this equipment does cause harmful interference to radio or television reception, which can be determined by turning the equipment off and on, the user is encouraged to try to correct the interference by one of the following measures:

- Reorient or relocate the receiving antenna.
- Increase the separation between the equipment and receiver.
- Connect the equipment into an outlet on a circuit different from that to which the receiver is connected.
- Consult the dealer or an experienced radio/TV technician for help.

Radio Transmitters (Part 15)

This device complies with part 15 of the FCC Rules. Operation is subject to the following two conditions:

1. This device may not cause harmful interference.
2. This device must accept any interference received, including interference that may cause undesired operation.

IMPORTANT NOTE

This device is restricted to mobile configuration. To comply with FCC RF exposure compliance requirements, the antenna used for this transmitter must be installed to provide a separation distance of at least 50 cm from all persons and must not be co-located or operating in conjunction with any other antenna or transmitter. This device must not be co-located or operating in conjunction with any other antenna or transmitter.

Canada, Innovation, Science and Economic Development Canada (ISED) Notices

This device contains licence-exempt transmitter(s)/receiver(s) that comply with Innovation, Science and Economic Development Canada's licence-exempt RSS(s). Operation is subject to the following two conditions:
This device may not cause interference.
This device must accept any interference, including interference that may cause undesired operation of the device.

Radio Frequency (RF) Exposure Information

The radiated output power of the Wireless Device is below the Innovation, Science and Economic Development Canada (ISED) radio frequency exposure limits. The Wireless Device should be used in such a manner such that the potential for human contact during normal operation is minimized.
This device has also been evaluated and shown compliant with the ISED RF Exposure limits under mobile exposure conditions. (antennas are greater than 50 cm from a person's body).

Avis du Canada, Innovation, Sciences et Développement économique Canada (ISED)

L'émetteur/récepteur exempt de licence contenu dans le présent appareil est conforme aux CNR d'Innovation, Sciences et Développement économique Canada applicables aux appareils radio exempts de licence. L'exploitation est autorisée aux deux conditions suivantes :
(1) L'appareil ne doit pas produire de brouillage;
(2) L'appareil doit accepter tout brouillage radioélectrique subi, même si le brouillage est susceptible d'en compromettre le fonctionnement.

Informations concernant l'exposition aux fréquences radio (RF)

La puissance de sortie rayonnée du dispositif sans fil est inférieure aux limites d'exposition aux radiofréquences d'Innovation, Sciences et Développement économique Canada (ISED). Le dispositif sans fil doit être utilisé de manière à minimiser le potentiel de contact humain pendant le fonctionnement normal.

Cet appareil a également été évalué et montré conforme aux limites d'exposition RF ISED dans des conditions d'exposition mobiles. (Les antennes sont à plus de 50 cm du corps d'une personne).

NCC Statements

經型式認證合格之低功率射頻電機，非經許可，公司、商號或使用者均不得擅自變更頻率、加大功率或變更原設計之特性及功能。

低功率射頻電機之使用不得影響飛航安全及干擾合法通信；經發現有干擾現象時，應立即停用，並改善至無干擾時方得繼續使用。

前項合法通信，指依電信法規定作業之無線電通信。低功率射頻電機須忍受合法通信或工業、科學及醫療用電波輻射性電機設備之干擾。

應避免影響附近雷達系統之操作。高增益指向性天線只得應用於固定式點對點系統。

KC Statements

이 기기는 업무용 환경에서 사용할 목적으로 적합성평가를 받은
기기로서가정용 환경에서 사용하는 경우 전파간섭의 우려가 있습니다.