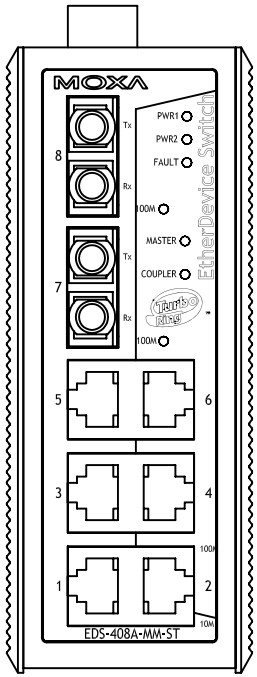

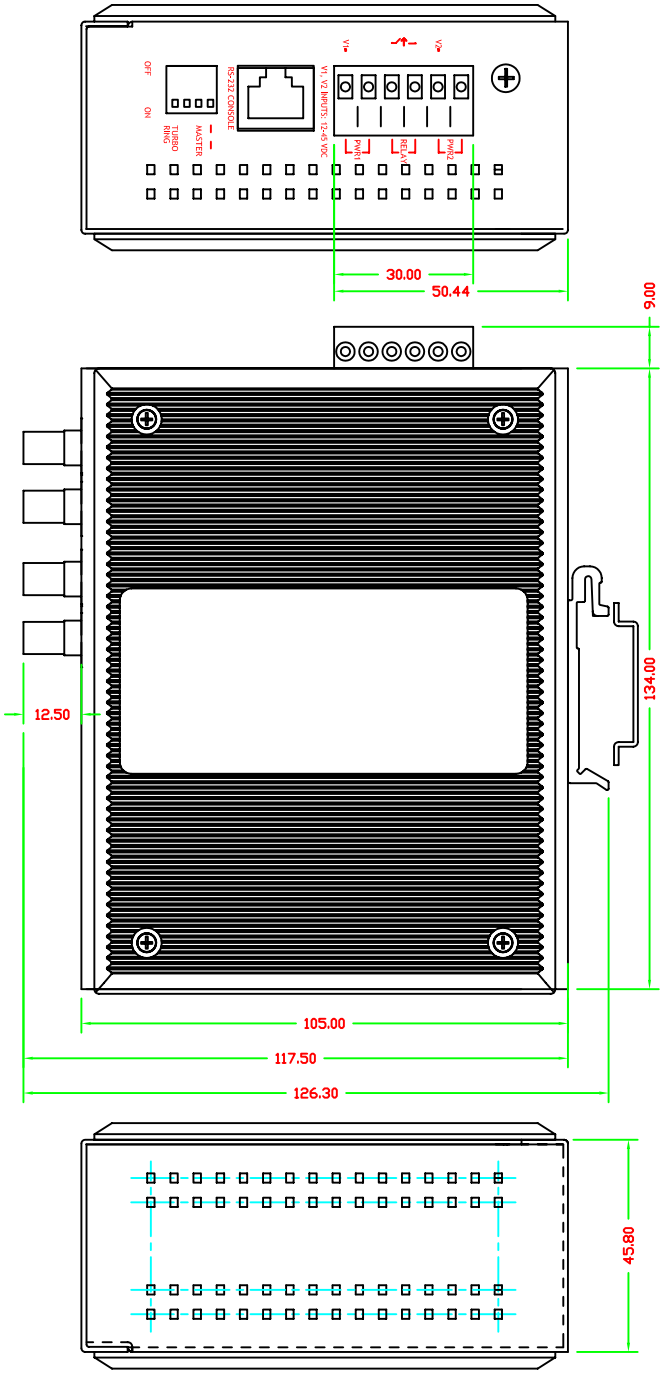

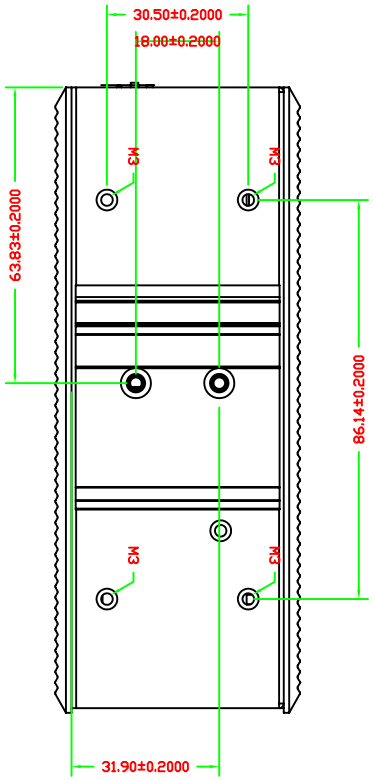

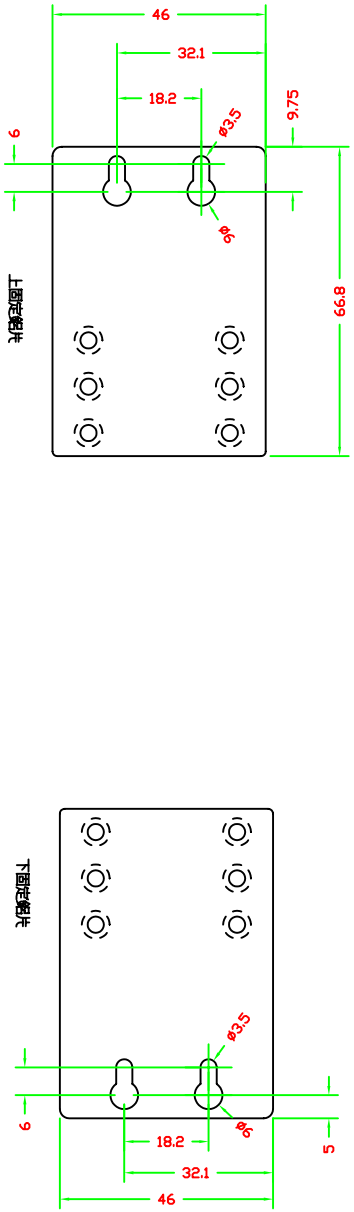

Panel Mount Kit

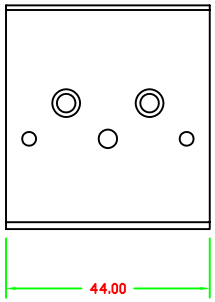

Din-Rail