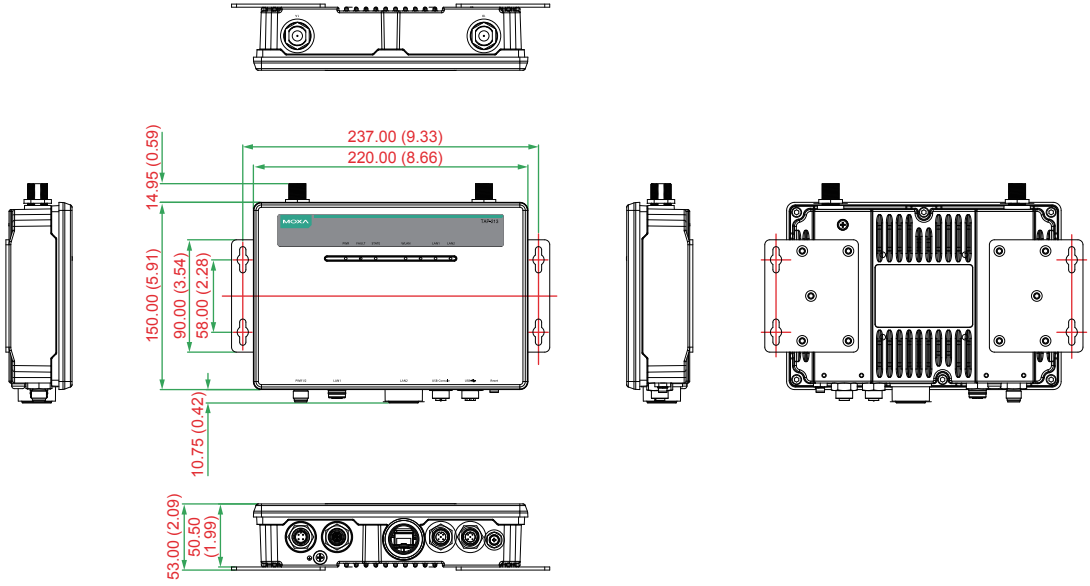
237.00 (9.33)
220.00 (8.66)
14.95 (0.59)
150.00 (5.91)
90.00 (3.54)
58.00 (2.28)
10.75 (0.42)
53.00 (2.09)
50.50
(1.99)
MOXA
TAP-213
PWR
PWR2
FAULT
STATE
LAN1
LAN2
PWR1 G
LAN 1
LAN2
USB Host
USB Device
Reset